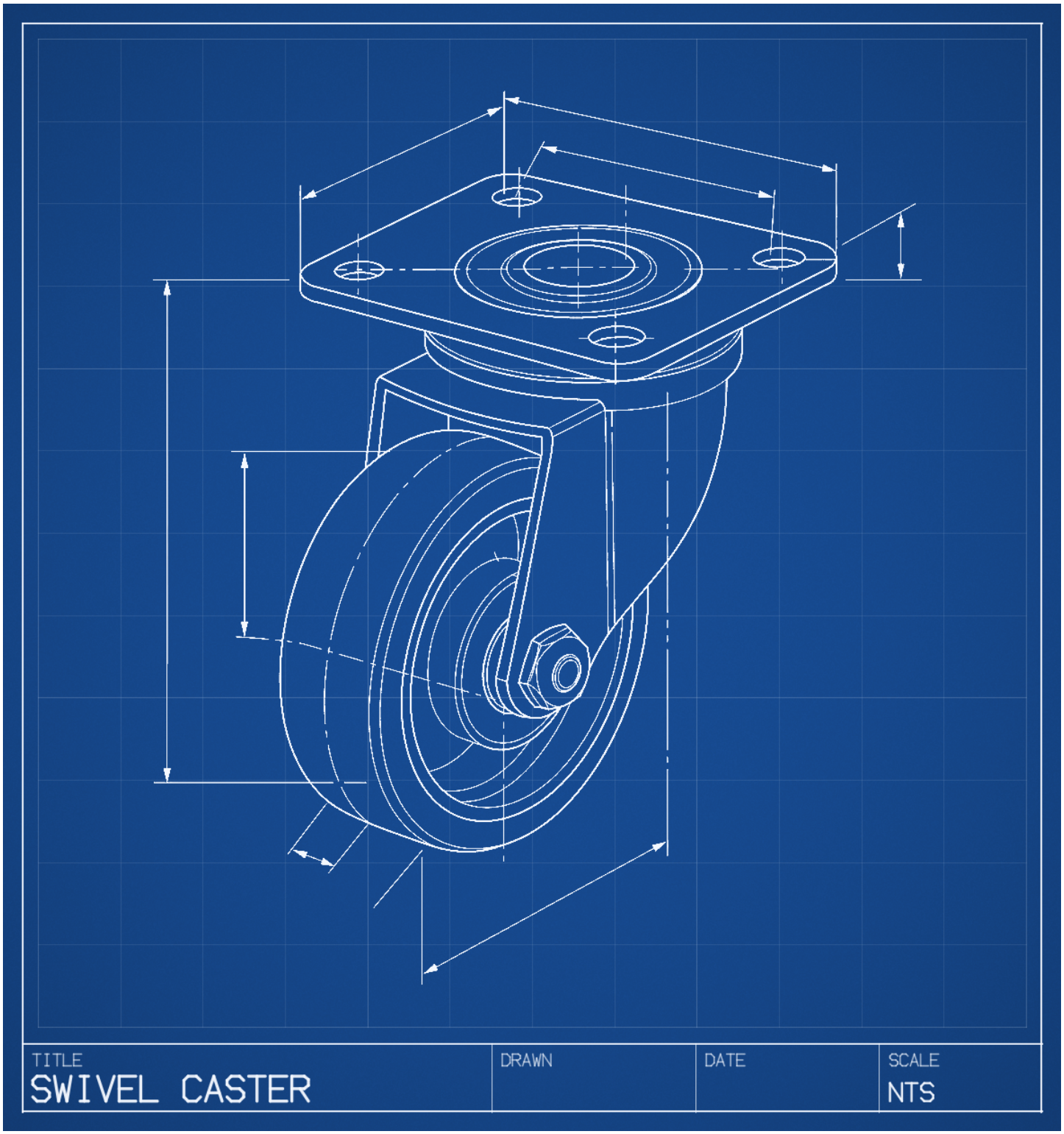

TITLE	DRAWN	DATE	SCALE
SWIVEL CASTER			NTS